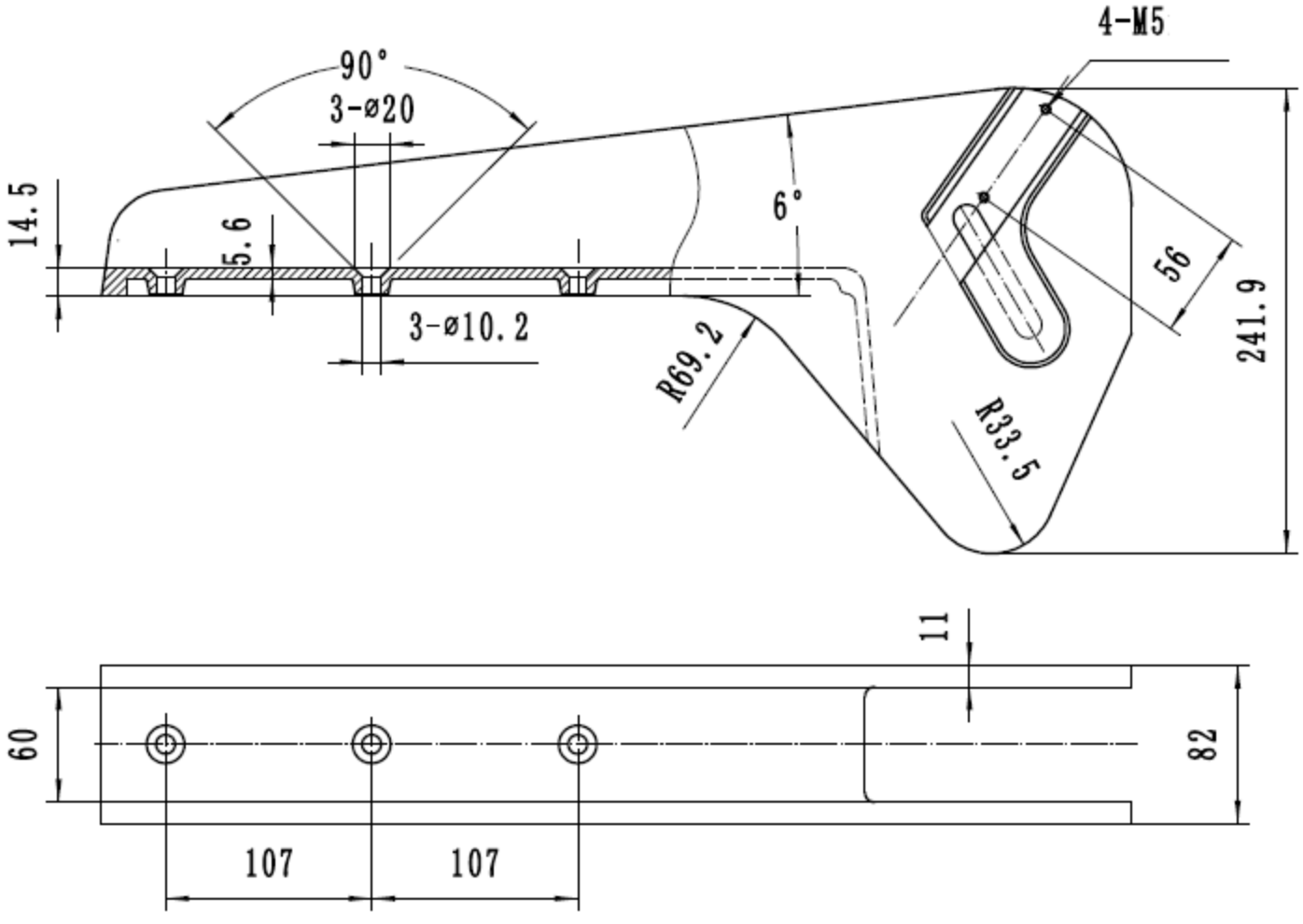
4-M5
90°
3-ø20
14.5
5.6
6°
56
241.9
3-ø10.2
R69.2
R33.5
11
60
82
107
107