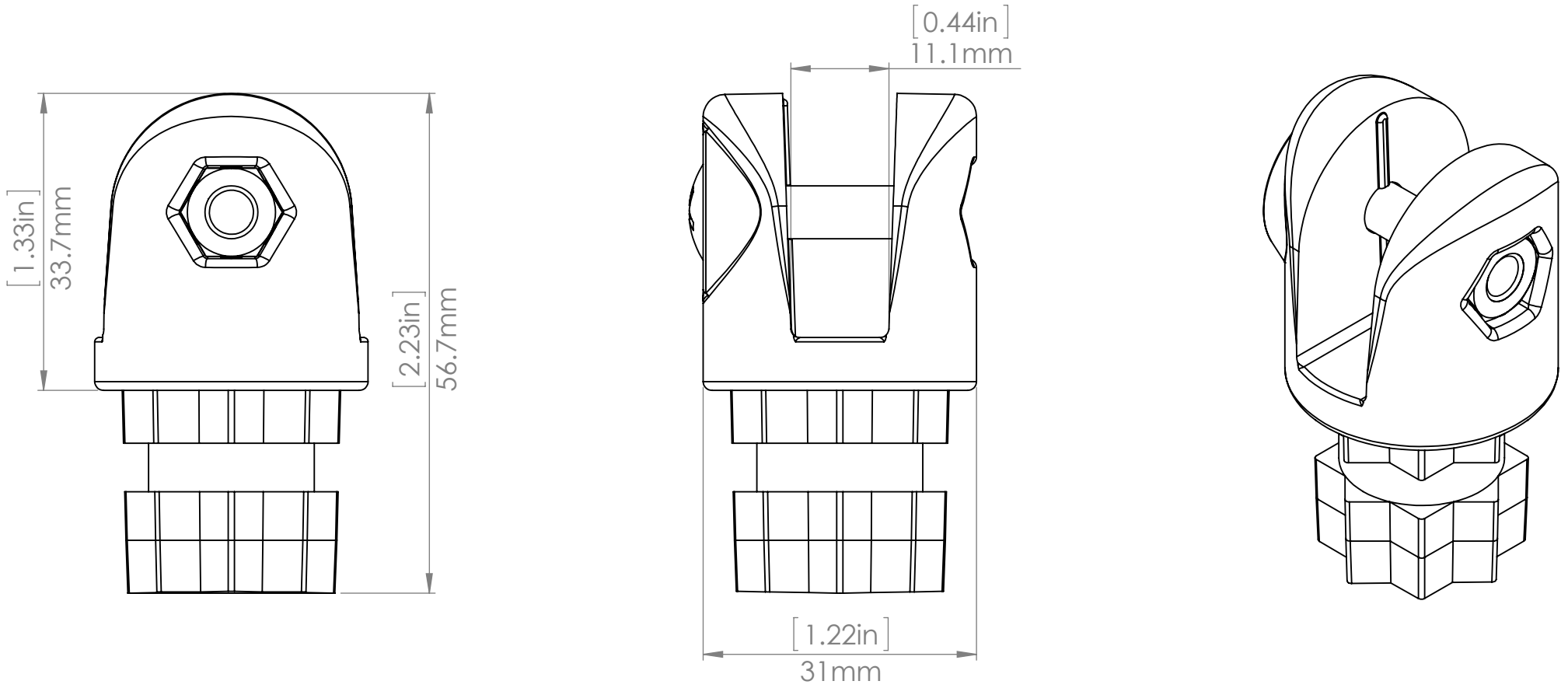
[1.33in]
33.7mm
[2.23in]
56.7mm
[0.44in]
11.1mm
[1.22in]
31mm